DURA-VANE II

Submittal

JDVA 14 20 & 24
Dura-Vane II Architectural
Copper/Aluminum and
Steel Elements

☐ **JDVA Slip Jointed Enclosure**

Specification

ENCLOSURE:

STYLE: Dura-Vane II
OUTLET: Extruded Aluminum Grille
Pencil Proof

LENGTHS: 2'0" thru 8'0" in 6" Increments
MAT'L: ☐ 16 Ga. CRS (Std)
☐ 14 Ga. CRS (Opt'l)
☐ 16 Ga. Stainless Steel (Opt'l)
☐ 14 Ga. Stainless Steel (Opt'l)
☐ 14 Ga. Aluminum (Opt'l)
☐ 12 Ga. Aluminum (Opt'l)
HEIGHT: ☐ 14"
☐ 20"
☐ 24"
FINISH ☐ Baked Powder (Std)
☐ Baked Metallic (Opt'l)

ACCESSORIES:

☐ JDVA Overlapping Type
All accessories have finger tabs at the bottom for easy installation.

ELEMENT:

TYPE: ☐ Cu/Al (Mechanically Expanded)
LENGTHS: 2'0" thru 12'6" in 1" Increments for 1" & 1-1/4" Cu.
2' thru 8' in 1" Increments for 3/4" Cu.

One End Flared (Std)

TYPE ☐ IPS Steel (Mechanically Expanded)
LENGTHS: 2'0" thru 12'6" in 1" Increments
☐ NPT Thread both Ends (Std)
☐ Beveled Ends for Field Weld

See Catalog for Working Pressures

BACKPLATE:

TYPE: ☐ Partial B/P
LENGTHS: 8'0" Only
MAT'L: ☐ 20 Ga. Prepainted (Opt'l)
☐ 18 Ga. Galvannealed (Opt'l)

☐ Full Ht. B/P (Opt'l)
2'0" thru 8'0" in 6" increments
☐ 20 Ga. Galvannealed (Opt'l)
☐ 20 Ga. Painted (Opt'l)
☐ 18 Ga. Painted (Opt'l)

AIRSEAL:

☐ 1/8" x 3/8" Closed Cell (Opt'l)

BRACKETS:

☐ Water Brkt w/B.B.
☐ Steam Brkt w/Brkt Mtd B.B. Hngr

☐ **JDVA 24** ☐ **JDVA 20** ☐ **JDVA 14**

ELEMENT TUBE SIZE	FIN SIZE HEIGHT x WIDTH	CRADLE NUMBER	A
3/4 COPPER	3 1/4 x 3 1/4	2	7"
1" COPPER	3 1/4 x 3 1/4	2	7 3/16
1 1/4 COPPER	3 1/4 x 3 1/4	1	6 5/8
1" STEEL	3 1/4 x 3 1/4	2	7 5/16
1 1/4 STEEL	3 1/4 x 3 1/4	1	6 13/16

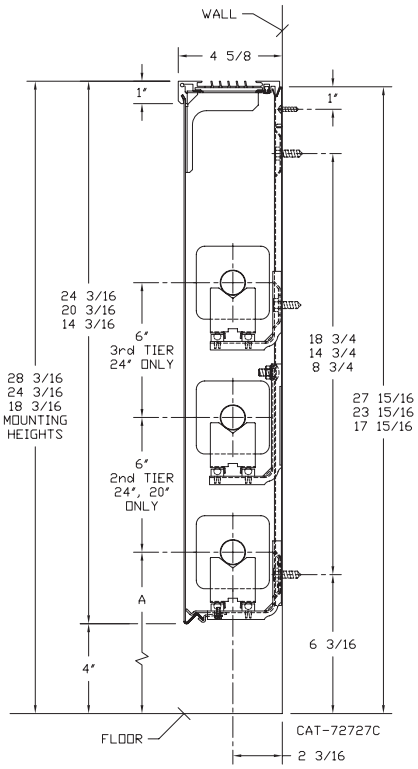

STERLING®
COMMERCIAL HYDRONIC PRODUCTS
MADE IN THE USA
260 North Elm St., Westfield, MA 01085
(413) 564-5535 Fax: (413) 562-8437
www.sterlingheat.com

6/2022

PROJECT: _____ **DATE:** _____
LOCATION: _____
ARCHITECT: _____
ENGINEER: _____
CONTRACTOR: _____
PO NUMBER: _____

STYLES JDVA 14 20 & 24 DURA-VANE II

COPPER/ALUMINUM ELEMENT RATINGS ALL RATINGS ARE BASED ON 3 FPS VELOCITY, 65° EAT								STEAM 215° FACTOR	HOT WATER (AVG.)								
					ENCL HEIGHT IN INCHES	TIERS AND CENTERS IN INCHES	MTG. HEIGHT IN INCHES		200°	190°	180°	170°	160°	150°	140°	130°	120°
TUBE SIZE	CATALOG DESIGNATION	FIN SIZE HEIGHT X WIDTH	FIN PER FT.	FIN THICKNESS IN INCHES					CORRECTION FACTORS FOR AVERAGE WATER TEMPERATURES								
								1.00	0.86	0.78	0.69	0.61	0.53	0.45	.40	.33	.26
3/4″	C3/4-33	3-1/4″SQ.	32	.020	14-3/16	1	18-3/16	1050	900	820	720	640	560	470	420	350	270
					20-3/16	1	24-3/16	1110	950	870	770	680	590	500	440	370	290
					20-3/16	2-6 CL	24-3/16	1660	1430	1290	1150	1010	880	750	660	550	430
					24-3/16	1	28-3/16	1160	1000	900	800	710	610	520	460	380	300
					24-3/16	2-6 CL	28-3/16	1740	1500	1360	1200	1060	920	780	700	570	450
					24-3/16	3-6 CL	28-3/16	2000	1720	1560	1380	1220	1060	900	800	660	520
3/4″	C3/4-34	3-1/4″SQ.	40	.020	14-3/16	1	18-3/16	1230	1060	960	850	750	650	550	490	410	320
					20-3/16	1	24-3/16	1300	1120	1010	900	790	690	590	520	430	340
					20-3/16	2-6 CL	24-3/16	1890	1630	1470	1300	1150	1000	850	760	620	490
					24-3/16	1	28-3/16	1390	1200	1080	960	850	740	630	560	460	360
					24-3/16	2-6 CL	28-3/16	2010	1730	1570	1390	1230	1070	900	800	660	520
					24-3/16	3-6 CL	28-3/16	2290	1970	1790	1580	1400	1210	1030	920	760	600
3/4″	C3/4-35	3-1/4″SQ.	50	.020	14-3/16	1	18-3/16	1370	1180	1070	950	840	730	620	550	450	360
					20-3/16	1	24-3/16	1460	1260	1140	1010	890	770	660	580	480	380
					20-3/16	2-6 CL	24-3/16	2040	1750	1590	1410	1240	1080	920	820	670	530
					24-3/16	1	28-3/16	1550	1330	1210	1070	950	820	700	620	510	400
					24-3/16	2-6 CL	28-3/16	2170	1870	1690	1500	1320	1150	980	870	720	560
					24-3/16	3-6 CL	28-3/16	2450	2110	1910	1690	1490	1300	1100	980	810	640
1″	C33	3-1/4″SQ.	32	.020	14-3/16	1	18-3/16	1130	970	880	780	690	600	510	450	370	290
					20-3/16	1	24-3/16	1190	1020	930	820	730	630	540	480	390	310
					20-3/16	2-6 CL	24-3/16	1780	1530	1390	1230	1090	940	800	710	590	460
					24-3/16	1	28-3/16	1250	1080	980	860	760	660	560	500	410	330
					24-3/16	2-6 CL	28-3/16	1870	1610	1460	1290	1140	990	840	750	620	490
					24-3/16	3-6 CL	28-3/16	2150	1850	1680	1480	1310	1140	970	860	710	560
1″	C34	3-1/4″SQ.	40	.020	14-3/16	1	18-3/16	1270	1090	990	880	770	670	570	510	420	330
					20-3/16	1	24-3/16	1340	1150	1050	920	820	710	600	540	440	350
					20-3/16	2-6 CL	24-3/16	1940	1670	1510	1340	1180	1030	870	780	640	500
					24-3/16	1	28-3/16	1430	1230	1120	990	870	760	640	570	470	370
					24-3/16	2-6 CL	28-3/16	1920	1650	1500	1320	1170	1020	860	770	630	500
					24-3/16	3-6 CL	28-3/16	2190	1880	1710	1510	1340	1160	990	880	720	570
1″	C35	3-1/4″SQ.	50	.020	14-3/16	1	18-3/16	1320	1140	1030	910	810	700	590	530	440	340
					20-3/16	1	24-3/16	1400	1200	1090	970	850	740	630	560	460	360
					20-3/16	2-6 CL	24-3/16	1950	1680	1520	1350	1190	1030	880	780	640	510
					24-3/16	1	28-3/16	1490	1280	1160	1030	910	790	670	600	490	390
					24-3/16	2-6 CL	28-3/16	2080	1790	1620	1440	1270	1100	940	830	690	540
					24-3/16	3-6 CL	28-3/16	2350	2020	1830	1620	1430	1250	1060	940	780	610
1-1/4″	C133	3-1/4″SQ.	32	.020	14-3/16	1	18-3/16	1130	970	880	780	690	600	510	450	370	290
					20-3/16	1	24-3/16	1190	1020	930	820	730	630	540	480	390	310
					20-3/16	2-6 CL	24-3/16	1780	1530	1390	1230	1090	940	800	710	590	460
					24-3/16	1	28-3/16	1250	1080	980	860	760	660	560	500	410	330
					24-3/16	2-6 CL	28-3/16	1870	1610	1460	1290	1140	990	840	750	620	490
					24-3/16	3-6 CL	28-3/16	2150	1850	1680	1480	1310	1140	970	860	710	560
1-1/4″	C134	3-1/4″SQ.	40	.020	14-3/16	1	18-3/16	1250	1080	980	860	760	660	560	500	410	330
					20-3/16	1	24-3/16	1320	1140	1030	910	810	700	590	530	440	340
					20-3/16	2-6 CL	24-3/16	1920	1650	1500	1320	1170	1020	860	770	630	500
					24-3/16	1	28-3/16	1410	1210	1100	970	860	750	630	560	470	370
					24-3/16	2-6 CL	28-3/16	1890	1630	1470	1300	1150	1000	850	760	620	490
					24-3/16	3-6 CL	28-3/16	2150	1850	1680	1480	1310	1140	970	860	710	560
1-1/4″	C135	3-1/4″SQ.	50	.020	14-3/16	1	18-3/16	1300	1120	1010	900	790	690	590	520	430	340
					20-3/16	1	24-3/16	1390	1200	1080	960	850	740	630	560	460	360
					20-3/16	2-6 CL	24-3/16	1940	1670	1510	1340	1180	1030	870	780	640	500
					24-3/16	1	28-3/16	1470	1260	1150	1010	900	780	660	590	490	380
					24-3/16	2-6 CL	28-3/16	2050	1760	1600	1410	1250	1090	920	820	680	530
					24-3/16	3-6 CL	28-3/16	2320	2000	1810	1600	1420	1230	1040	930	770	600

Copper tube furnished flared one end standard.

STYLES JDVA 14 20 & 24 DURA-VANE II

STEEL ELEMENT RATINGS ALL RATINGS ARE BASED ON 3 FPS VELOCITY, 65° EAT					ENCL HEIGHT IN INCHES	TIERS AND CENTERS IN INCHES	MTG. HEIGHT IN INCHES	STEAM 215° FACTOR	HOT WATER (AVG.)								
									200°	190°	180°	170°	160°	150°	140°	130°	120°
TUBE SIZE	CATALOG DESIGNATION	FIN SIZE HEIGHT X WIDTH	FIN PER FT.	FIN THICKNESS IN INCHES					CORRECTION FACTORS FOR AVERAGE WATER TEMPERATURES								
								1.00	0.86	0.78	0.69	0.61	0.53	0.45	.40	.33	.26
1″	S33	3-1/4″SQ.	32	.032	14-3/16	1	18-3/16	1030	890	800	710	630	550	460	410	340	270
					20-3/16	1	24-3/16	1130	970	880	780	690	600	510	450	370	290
					20-3/16	2-6 CL	24-3/16	1640	1410	1280	1130	1000	870	740	660	540	430
					24-3/16	1	28-3/16	1170	1010	910	810	710	620	530	470	390	300
					24-3/16	2-6 CL	28-3/16	1700	1460	1330	1170	1040	900	770	680	560	440
					24-3/16	3-6 CL	28-3/16	1950	1680	1520	1350	1190	1030	880	780	640	510
1″	S34	3-1/4″SQ.	40	.032	14-3/16	1	18-3/16	1100	950	860	760	670	580	500	440	360	290
					20-3/16	1	24-3/16	1280	1100	1000	880	780	680	580	510	420	330
					20-3/16	2-6 CL	24-3/16	1800	1550	1400	1240	1100	950	810	720	590	470
					24-3/16	1	28-3/16	1315	1130	1030	910	800	700	590	530	430	340
					24-3/16	2-6 CL	28-3/16	1860	1600	1450	1280	1130	990	840	740	610	480
					24-3/16	3-6 CL	28-3/16	2120	1820	1650	1460	1290	1120	950	850	700	550
1″	S35	3-1/4″SQ.	50	.032	14-3/16	1	18-3/16	1175	1010	920	810	720	620	530	470	390	310
					20-3/16	1	24-3/16	1340	1150	1050	920	820	710	600	540	440	350
					20-3/16	2-6 CL	24-3/16	1870	1610	1460	1290	1140	990	840	750	620	490
					24-3/16	1	28-3/16	1390	1200	1080	960	850	740	630	560	460	360
					24-3/16	2-6 CL	28-3/16	1930	1660	1510	1330	1180	1020	870	770	640	500
					24-3/16	3-6 CL	28-3/16	2180	1870	1700	1500	1330	1160	980	870	720	570
1-1/4″	S133	3-1/4″SQ.	32	.032	14-3/16	1	18-3/16	1020	880	800	700	620	540	460	410	340	270
					20-3/16	1	24-3/16	1120	960	870	770	680	590	500	450	370	290
					20-3/16	2-6 CL	24-3/16	1680	1440	1310	1160	1020	890	760	670	550	440
					24-3/16	1	28-3/16	1160	1000	900	800	710	610	520	460	380	300
					24-3/16	2-6 CL	28-3/16	1740	1500	1360	1200	1060	920	780	700	570	450
					24-3/16	3-6 CL	28-3/16	2000	1720	1560	1380	1220	1060	900	800	660	520
1-1/4″	S134	3-1/4″SQ.	40	.032	14-3/16	1	18-3/16	1110	950	870	770	680	590	500	440	370	290
					20-3/16	1	24-3/16	1290	1110	1010	890	790	680	580	520	430	340
					20-3/16	2-6 CL	24-3/16	1800	1550	1400	1240	1100	950	810	720	590	470
					24-3/16	1	28-3/16	1330	1140	1040	920	810	700	600	530	440	350
					24-3/16	2-6 CL	28-3/16	1860	1600	1450	1280	1130	990	840	740	610	480
					24-3/16	3-6 CL	28-3/16	2120	1820	1650	1460	1290	1120	950	850	700	550
1-1/4″	S135	3-1/4″SQ.	50	.032	14-3/16	1	18-3/16	1145	980	890	790	700	610	520	460	380	300
					20-3/16	1	24-3/16	1305	1120	1020	900	800	690	590	520	430	340
					20-3/16	2-6 CL	24-3/16	1830	1570	1430	1260	1120	970	820	730	600	480
					24-3/16	1	28-3/16	1350	1160	1050	930	820	720	610	540	450	350
					24-3/16	2-6 CL	28-3/16	1890	1630	1470	1300	1150	1000	850	760	620	490
					24-3/16	3-6 CL	28-3/16	2140	1840	1670	1480	1310	1130	960	860	710	560

NPT threads furnished on steel elements. Please use domestic fittings for proper installation.

"A" OFFSET

ELEMENT TUBE SIZE	FIN SIZE HEIGHT × WIDTH	CRADLE NUMBER	A MIN	A MAX
3/4 COPPER	3 1/4 × 3 1/4	2	7 3/8	9 5/8
1″ COPPER	3 1/4 × 3 1/4	2	7 1/2	9 3/4
1 1/4 COPPER	3 1/4 × 3 1/4	2	7 5/8	9 7/8
1″ STEEL	3 1/4 × 3 1/4	2	7 5/8	9 3/4
1 1/4 STEEL	3 1/4 × 3 1/4	1	7 3/16	9 3/8

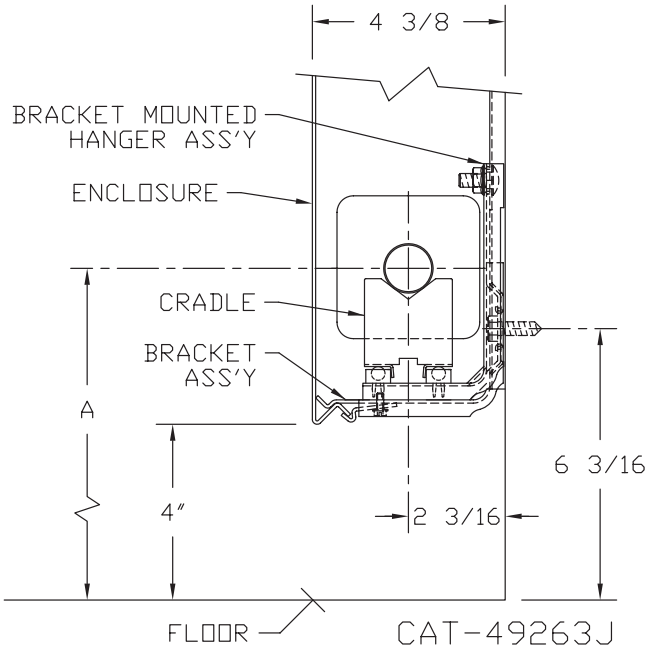

DESIGN DATA

COMMERCIAL FINNED TUBE CHARTS FOR RATING CORRECTIONS

For assistance with ratings and selection, please use our online Specifier.

CORRECTION FACTORS FOR WATER TEMPERATURES AND AIR TEMPERATURES OTHER THAN STANDARD

AVERAGE WATER TEMP. °F	ENTERING AIR TEMPERATURE °F														
	45	55	STD 65	70	75	80	85	90	95	100	110	120	130	140	150
90	.19	.13	.11	.06											
100	.25	.19	.15	.11	.08	.06									
110	.31	.25	.20	.16	.13	.11	.08	.06							
120	.38	.31	.26	.21	.19	.16	.13	.11	.08	.06					
130	.45	.38	.33	.28	.25	.21	.19	.16	.13	.11	.06				
140	.53	.45	.40	.34	.31	.28	.25	.21	.19	.16	.11	.06			
150	.61	.53	.45	.41	.38	.34	.31	.28	.25	.21	.16	.11	.06		
160	.69	.61	.53	.49	.45	.41	.38	.34	.31	.28	.21	.16	.11	.06	
170	.77	.69	.61	.57	.53	.49	.45	.41	.38	.34	.28	.21	.16	.11	.06
180	.86	.77	.69	.65	.61	.57	.53	.49	.45	.41	.34	.28	.21	.16	.11
190	.95	.86	.78	.73	.69	.65	.61	.57	.53	.49	.41	.34	.28	.21	.16
200	1.05	.95	.86	.82	.77	.73	.69	.65	.61	.57	.49	.41	.34	.28	.21
210	1.14	1.05	.95	.91	.86	.82	.77	.73	.69	.65	.57	.49	.41	.34	.28
▶ 215 (STD.)	1.19	1.09	1.00	.95	.91	.86	.82	.77	.73	.69	.61	.53	.45	.38	.31
220	1.24	1.14	1.05	1.00	.95	.91	.86	.82	.77	.73	.65	.57	.49	.41	.34
230	1.34	1.24	1.14	1.09	1.05	1.00	.95	.91	.86	.82	.73	.65	.57	.49	.41
240	1.44	1.34	1.25	1.19	1.14	1.09	1.05	1.00	.95	.91	.82	.73	.65	.57	.49
250	1.55	1.44	1.34	1.29	1.24	1.19	1.14	1.09	1.05	1.00	.91	.82	.73	.65	.57
260	1.66	1.55	1.44	1.39	1.34	1.29	1.24	1.19	1.14	1.09	1.00	.91	.82	.73	.65
270	1.76	1.66	1.55	1.50	1.44	1.39	1.34	1.29	1.24	1.19	1.09	1.00	.91	.82	.73
280	1.87	1.76	1.66	1.60	1.55	1.50	1.44	1.39	1.34	1.29	1.19	1.09	1.00	.91	.82
290	1.99	1.87	1.76	1.71	1.66	1.60	1.55	1.50	1.44	1.39	1.29	1.19	1.09	1.00	.91
300	2.10	1.99	1.87	1.82	1.76	1.71	1.66	1.60	1.55	1.50	1.39	1.29	1.19	1.09	1.00

CORRECTION FACTORS FOR STEAM PRESSURES AND AIR TEMPERATURES OTHER THAN STANDARD

STEAM PRESSURE		ENTERING AIR TEMPERATURE °F														
GAUGE	ABS. PSI	TEMP. °F	45	55	STD 65	70	75	80	85	90	100	110	120	130	140	150
(VAC) 15" HG	7.32	178.9	0.90	0.80	0.70	0.65	0.60	0.56	0.51	0.45	0.39	0.32	0.25	0.18	0.13	0.08
(VAC) 10"	9.78	192.2	1.02	0.91	0.81	0.76	0.71	0.66	0.62	0.55	0.48	0.40	0.33	0.26	0.20	0.14
(VAC) 5"	12.25	202.9	1.11	1.00	0.90	0.85	0.79	0.75	0.70	0.63	0.56	0.48	0.40	0.33	0.27	0.20
0 PSI	14.696	212.0	1.19	1.09	0.97	0.92	0.87	0.82	0.77	0.70	0.63	0.54	0.46	0.38	0.31	0.25
▶ .899	15.595	215.0	1.22	1.11	1.00	0.95	0.90	0.84	0.80	0.75	0.65	0.57	0.48	0.40	0.33	0.26
5	19.70	227.1	1.34	1.22	1.11	1.05	1.00	0.95	0.90	0.81	0.75	0.66	0.57	0.49	0.41	0.34
10	24.70	239.4	1.45	1.33	1.22	1.17	1.11	1.05	1.00	0.91	0.85	0.75	0.66	0.58	0.50	0.42
15	29.70	249.8	1.55	1.43	1.31	1.26	1.20	1.14	1.09	1.00	0.94	0.84	0.75	0.66	0.57	0.49
20	34.70	258.5	1.63	1.52	1.40	1.33	1.28	1.23	1.17	1.07	1.02	0.92	0.82	0.73	0.64	0.55
25	39.70	266.8	1.71	1.59	1.47	1.41	1.36	1.30	1.25	1.15	1.09	0.98	0.89	0.80	0.71	0.62
30	44.70	274.0	1.78	1.66	1.54	1.48	1.42	1.37	1.31	1.21	1.15	1.05	0.95	0.85	0.76	0.68
40	54.70	286.7	1.91	1.79	1.66	1.61	1.54	1.49	1.43	1.32	1.27	1.16	1.06	0.97	0.87	0.78
50	64.70	297.7	2.02	1.90	1.77	1.71	1.65	1.60	1.54	1.42	1.37	1.26	1.16	1.06	0.96	0.87
60	74.70	307.3	2.10	2.00	1.87	1.81	1.75	1.69	1.63	1.51	1.47	1.35	1.25	1.15	1.05	0.95
70	84.70	316.0	2.20	2.09	1.95	1.89	1.83	1.77	1.71	1.59	1.55	1.44	1.33	1.23	1.12	1.03
80	94.70	323.9	2.27	2.17	2.03	1.97	1.91	1.85	1.80	1.69	1.63	1.52	1.41	1.31	1.20	1.10
90	104.70	331.2	2.36	2.24	2.11	2.05	1.98	1.93	1.87	1.74	1.70	1.59	1.48	1.38	1.28	1.17
100	114.70	337.9	2.43	2.31	2.18	2.11	2.05	2.00	1.94	1.81	1.77	1.65	1.54	1.44	1.33	1.23
125	139.70	352.9	2.59	2.47	2.33	2.27	2.21	2.16	2.10	1.96	1.92	1.80	1.69	1.59	1.48	1.38
150	164.70	365.9	2.73	2.62	2.47	2.43	2.35	2.29	2.23	2.08	2.05	1.94	1.82	1.72	1.61	1.51
175	189.70	377.4	2.86	2.74	2.60	2.54	2.47	2.41	2.35	2.21	2.17	2.05	1.95	1.85	1.73	1.63
200	214.70	387.8	2.95	2.85	2.71	2.63	2.58	2.52	2.47	2.31	2.29	2.17	2.06	1.96	1.84	1.75

From Keenan and Keyes — Linear Interpolation. NOTE: Gauge pressure should be corrected for altitude.

Rate of pitch for steam ½"drop over 20-foot run.

DESIGN DATA

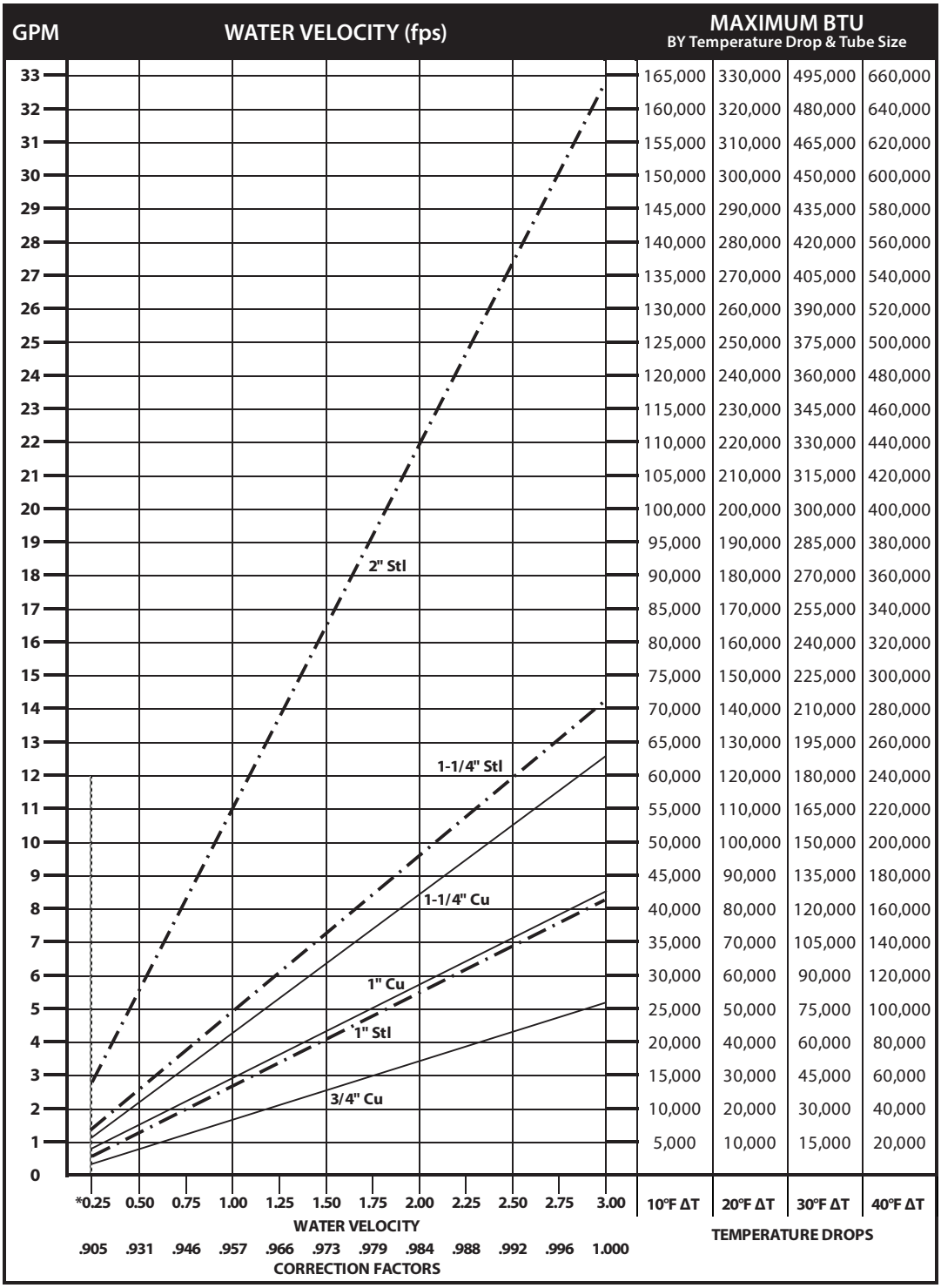

GPM	10°F ΔT	20°F ΔT	30°F ΔT	40°F ΔT
33	165,000	330,000	495,000	660,000
32	160,000	320,000	480,000	640,000
31	155,000	310,000	465,000	620,000
30	150,000	300,000	450,000	600,000
29	145,000	290,000	435,000	580,000
28	140,000	280,000	420,000	560,000
27	135,000	270,000	405,000	540,000
26	130,000	260,000	390,000	520,000
25	125,000	250,000	375,000	500,000
24	120,000	240,000	360,000	480,000
23	115,000	230,000	345,000	460,000
22	110,000	220,000	330,000	440,000
21	105,000	210,000	315,000	420,000
20	100,000	200,000	300,000	400,000
19	95,000	190,000	285,000	380,000
18	90,000	180,000	270,000	360,000
17	85,000	170,000	255,000	340,000
16	80,000	160,000	240,000	320,000
15	75,000	150,000	225,000	300,000
14	70,000	140,000	210,000	280,000
13	65,000	130,000	195,000	260,000
12	60,000	120,000	180,000	240,000
11	55,000	110,000	165,000	220,000
10	50,000	100,000	150,000	200,000
9	45,000	90,000	135,000	180,000
8	40,000	80,000	120,000	160,000
7	35,000	70,000	105,000	140,000
6	30,000	60,000	90,000	120,000
5	25,000	50,000	75,000	100,000
4	20,000	40,000	60,000	80,000
3	15,000	30,000	45,000	60,000
2	10,000	20,000	30,000	40,000
1	5,000	10,000	15,000	20,000
0				

*Do not design below .25 fps.

DYNAMIC FORMULAS

$$BTU = GPM \times 500 \times TD$$

$$GPM = \left(\frac{BTU}{500}\right) \div TD$$

$$TD = \left(\frac{BTU}{500}\right) \div GPM$$

Pressure Drop at Given Water Velocities (Feet of Water per 100 ft. of pipe) based on Hazen - Williams calculation

Nominal Pipe Size	Water Velocity (ft/sec)											
	0.25	0.50	0.75	1.00	1.25	1.50	1.75	2.00	2.25	2.50	2.75	3.00
3/4" Copper	0.06	0.20	0.42	0.72	1.09	1.53	2.04	2.61	3.25	3.95	4.71	5.53
1" Copper	0.04	0.15	0.32	0.54	0.81	1.14	1.52	1.94	2.42	2.94	3.50	4.11
1 1/4" Copper	0.03	0.12	0.25	0.43	0.64	0.90	1.20	1.54	1.92	2.33	2.78	3.26
1" Steel	0.04	0.15	0.32	0.54	0.81	1.14	1.52	1.95	2.42	2.94	3.51	4.12
1 1/4" Steel	0.03	0.11	0.23	0.40	0.60	0.84	1.12	1.44	1.79	2.17	2.59	3.05
2" Steel	0.02	0.07	0.14	0.25	0.37	0.52	0.69	0.89	1.10	1.34	1.60	1.88

DESIGN DATA

GUARANTEED WORKING PRESSURES

1" IPS — 780 at Temperatures up to 650˚F.
1-1/4" IPS — 660 at Temperatures up to 650˚F.
2" IPS — 405 at Temperatures up to 650˚F.
1-1/4" CU — 194 at Temperatures up to 300˚F.
1" CU 204 at Temperatures up to 300˚F.
3/4" CU 218 PSI at Temperatures up to 300˚F.

MAXIMUM PRESSURES AT OTHER TEMPERATURES ARE AVAILABLE UPON REQUEST.

Pipe Water Capacities and Quantities Circulated at Velocity of 3 Feet Per Second

Nominal Pipe Size	Pipe I.D. (inches)	Gals Per Lin. Ft.	GPM @ 3' per sec Velocity
3/4" Copper	0.835	0.028	5.12
1" Copper	1.077	0.047	8.52
1 1/4" Copper	1.315	0.071	12.70
1" Steel	1.075	0.047	8.49
1 1/4" Steel	1.395	0.079	14.29
2" Steel	2.115	0.183	32.85

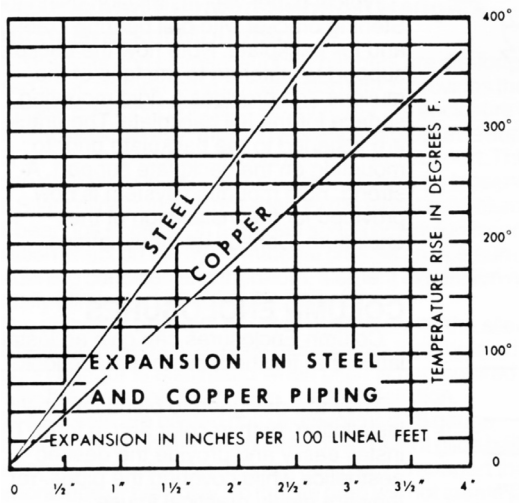

Glycol Correction Factors

Fluid Temperature 200°F

% Solution	Ethylene Glycol	Propylene Glycol
20	.952	.988
30	.921	.968
40	.888	.943
50	.852	.912

Fluid Temperature 180°F

% Solution	Ethylene Glycol	Propylene Glycol
20	.946	.982
30	.913	.961
40	.879	.934
50	.842	.902

Fluid Temperature 140°F

% Solution	Ethylene Glycol	Propylene Glycol
20	.934	.97
30	.898	.946
40	.861	.916
50	.821	.881

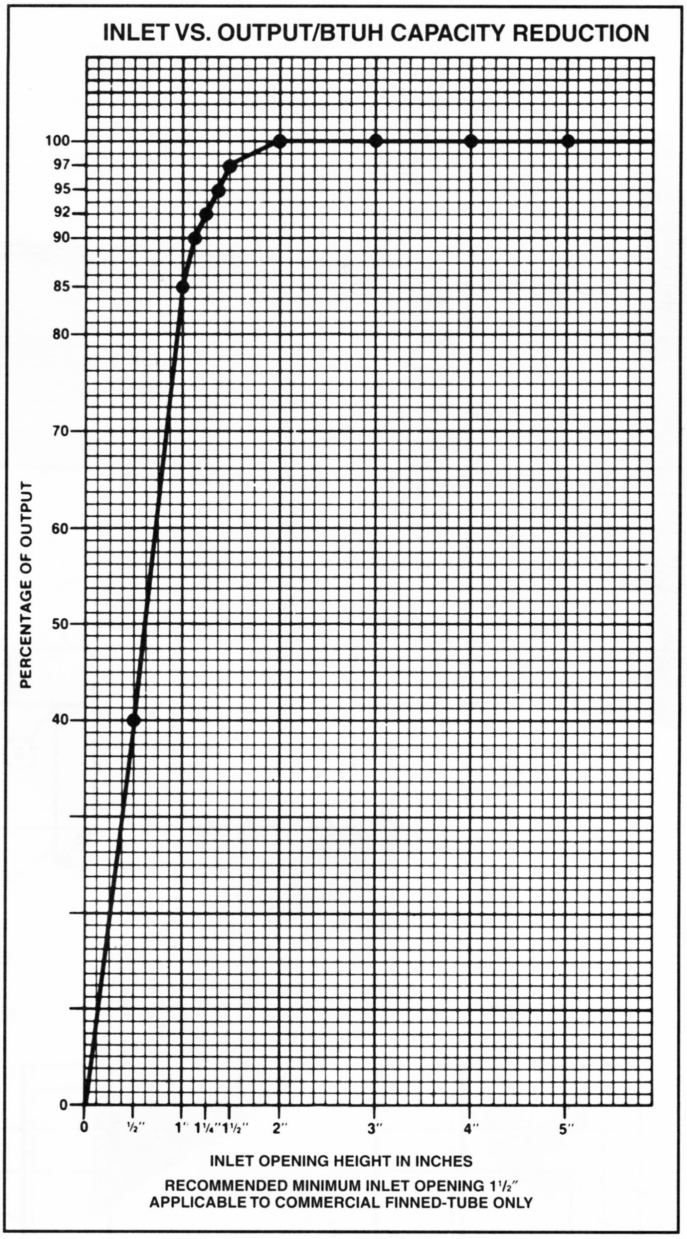

ALTITUDE FACTORS

Approximate factors for convective heat value at varying altitudes

Altitude	Ferrous Units	Copper Alum. Units
Sea Level	1.000	1,000
1,000 ft.	.984	.969
2,000 ft.	.968	.938
3,000 ft.	.952	.908
4,000 ft.	.936	.878
5,000 ft.	.920	.850
6,000 ft.	.904	.822
7,000 ft.	.889	.795
8,000 ft.	.874	.768
9,000 ft.	.859	.743
10,000 ft.	.844	.718
15,000 ft.	.771	.603
20,000 ft.	.703	.502